Load

30 TON LOAD CHART (0-2 DEGREE SLOPE), 360 Degree Capacities in tons

LOADCHART @ 75 % rating																	
Radius		Loaded Boom Angle	TRACKS EXTENDED Firm level Ground 360° Rating														
			Boom Length feet / meter														
Ft.	Mtr.	<°	28 ft	8,5 m	<°	47 ft	14,2 m	<°	62 ft	18,8 m	<°	77 ft	23,3 m	<°	92 ft	27,9 m
5,0	1,5	79°	60.500 lbs	27,5 t												
8,0	2,4	75°	49.475 lbs	22,5 t												
10,0	3,0	70°	44.725 lbs	20,3 t	79°	22.150 lbs	10,1 t									
12,0	3,6	66°	39.200 lbs	17,8 t	76°	22.150 lbs	10,1 t	80°	20.000 lbs	9,1 t						
15,0	4,5	59°	32.225 lbs	14,6 t	73°	22.150 lbs	10,1 t	78°	18.525 lbs	8,4 t	80°	14.150 lbs	6,4 t			
20,0	6,1	45°	23.200 lbs	10,5 t	66°	21.350 lbs	9,7 t	73°	16.750 lbs	7,6 t	77°	12.975 lbs	5,9 t	80°	9.925 lbs	4,5 t
25,0	7,6	27°	16.350 lbs	7,4 t	59°	16.725 lbs	7,6 t	68°	14.750 lbs	6,7 t	73°	11.900 lbs	5,4 t	76°	9.125 lbs	4,2 t
30,0	9,1				52°	12.700 lbs	5,8 t	63°	12.600 lbs	5,7 t	69°	10.500 lbs	4,8 t	73°	8.300 lbs	3,8 t
35,0	10,6				43°	10.050 lbs	4,6 t	58°	10.150 lbs	4,6 t	65°	9.325 lbs	4,2 t	70°	7.475 lbs	3,4 t
40,0	12,1				33°	8.150 lbs	3,7 t	52°	8.275 lbs	3,8 t	61°	8.450 lbs	3,8 t	67°	6.750 lbs	3,1 t
45,0	13,6				17°	6.750 lbs	3,1 t	45°	6.875 lbs	3,1 t	57°	6.925 lbs	3,2 t	64°	6.075 lbs	2,8 t
50,0	15,2							38°	5.775 lbs	2,6 t	52°	5.850 lbs	2,7 t	60°	5.500 lbs	2,5 t
55,0	16,7							29°	4.925 lbs	2,2 t	47°	4.975 lbs	2,3 t	56°	4.925 lbs	2,2 t
60,0	18,2							15°	4.200 lbs	1,9 t	41°	4.275 lbs	1,9 t	52°	4.325 lbs	2,0 t
65,0	19,7										34°	3.675 lbs	1,7 t	48°	3.825 lbs	1,7 t
70,0	21,2										26°	3.175 lbs	1,5 t	43°	3.225 lbs	1,5 t
75,0	22,7										14°	2.750 lbs	1,3 t	38°	2.800 lbs	1,3 t
80,0	24,2													32°	2.425 lbs	1,1 t
85,0	25,8													25°	2.100 lbs	1,0 t
90,0	27,3													13°	1.800 lbs	0,8 t
Boom horizontal			9.460 lbs	4,3 t	0°	4.320 lbs	2,0 t	0°	2.470 lbs	1,1 t	0°	1.350 lbs	0,6 t	0°	600 lbs	0,3 t
Meets ANSI/ASME B 30.5 and DIN 15018 DIN 15019 Requirements																

Information: Load ratings above the heavy Line are Structurally limited capacities. Load ratings below the heavy line are stability limited capacities and do not exceed 75% of tipping.

Note: When using auxillary boom head, loads are limited to the above AND maximum single part line pull of 9,500 pounds for 5/8"6x 25 IWRC wire rope or 9,080 pounds for 5/8" Rotation Resistant wire rope. Only single part reeving is allowed.

JIB CHART @ 75%								
Loaded Boom Angle	TRACKS EXTENDED FULLY EXTENDED BOOM Firm level Ground 360° Rating 20 Foot 6 Meter swing around jib							
	JIB OFFSET Angle in degrees							
<°	0°		<°	15°		<°	30°	
80°	5.000 lbs	2,27 t	80°	2.715 lbs	1,24 t	80°	1.970 lbs	0,90 t
78°	4.450 lbs	2,02 t	78°	2.600 lbs	1,18 t	78°	1.925 lbs	0,88 t
75°	3.860 lbs	1,76 t	75°	2.390 lbs	1,09 t	75°	1.830 lbs	0,84 t
70°	3.175 lbs	1,45 t	70°	2.150 lbs	0,98 t	70°	1.720 lbs	0,79 t
65°	2.715 lbs	1,24 t	65°	1.970 lbs	0,90 t	65°	1.630 lbs	0,74 t
60°	2.390 lbs	1,09 t	60°	1.830 lbs	0,84 t	60°	1.570 lbs	0,72 t
55°	2.150 lbs	0,98 t	55°	1.720 lbs	0,79 t	55°	1.515 lbs	0,69 t
50°	1.970 lbs	0,90 t	50°	1.630 lbs	0,74 t	50°	1.480 lbs	0,68 t
45°	1.830 lbs	0,84 t	45°	1.570 lbs	0,72 t	45°	1.450 lbs	0,66 t
40°	1.720 lbs	0,79 t	40°	1.515 lbs	0,69 t	40°	1.435 lbs	0,66 t
35°	1.570 lbs	0,72 t	35°	1.480 lbs	0,68 t	35°	1.430 lbs	0,65 t
30°	1.430 lbs	0,65 t	30°	1.385 lbs	0,63 t	30°	1.310 lbs	0,60 t
25°	1.275 lbs	0,58 t	25°	1.250 lbs	0,57 t			
20°	1.140 lbs	0,52 t	20°	1.120 lbs	0,51 t			
15°	1.020 lbs	0,47 t	15°	1.020 lbs	0,47 t			
10°	925 lbs	0,42 t						
5°	875 lbs	0,40 t						
0°	825 lbs	0,38 t						
Meets ANSI/ASME B 30.5 and DIN 15018 DIN 15019 Requirements								

Information: Load ratings above the heavy Line are Structurally limited capacities. Load ratings below the heavy line are stability limited capacities and do not exceed 75% of tipping.

PRELIMINARY JIB CHART @ 75%								
Loaded Boom Angle	TRACKS EXTENDED FULLY EXTENDED BOOM Firm level Ground 360° Rating							
	fixed jib			telescopic jib				
<°	26 ft	8 m	<°	26 ft	8 m	<°	46 ft	14 m
79°	5.600 lbs	2,55 t	79°	5.400 lbs	2,46 t			
77°	5.300 lbs	2,41 t	77°	5.100 lbs	2,32 t	79°	3.400 lbs	1,55 t
75°	4.960 lbs	2,26 t	75°	4.700 lbs	2,14 t	77°	3.300 lbs	1,50 t
72°	4.490 lbs	2,04 t	72°	4.230 lbs	1,92 t	76°	3.200 lbs	1,46 t
70°	4.080 lbs	1,86 t	70°	3.820 lbs	1,74 t	74°	3.040 lbs	1,38 t
67°	3.710 lbs	1,69 t	67°	3.440 lbs	1,57 t	72°	2.800 lbs	1,28 t
65°	3.380 lbs	1,54 t	65°	3.100 lbs	1,41 t	69°	2.670 lbs	1,22 t
62°	3.080 lbs	1,40 t	62°	2.810 lbs	1,28 t	67°	2.480 lbs	1,13 t
59°	2.820 lbs	1,28 t	59°	2.540 lbs	1,16 t	65°	2.310 lbs	1,05 t
56°	2.470 lbs	1,13 t	56°	2.180 lbs	0,99 t	63°	2.110 lbs	0,96 t
53°	2.070 lbs	0,94 t	53°	1.770 lbs	0,81 t	60°	1.940 lbs	0,89 t
50°	1.720 lbs	0,79 t	50°	1.430 lbs	0,65 t	58°	1.770 lbs	0,81 t
46°	1.420 lbs	0,65 t	46°	1.130 lbs	0,52 t	55°	1.580 lbs	0,72 t
42°	1.160 lbs	0,53 t	42°	870 lbs	0,40 t	52°	1.320 lbs	0,60 t
38°	930 lbs	0,43 t	38°	640 lbs	0,30 t	49°	1.080 lbs	0,50 t
						46°	870 lbs	0,40 t
						43°	690 lbs	0,32 t
Meets ANSI/ASME B 30.5 and DIN 15018 DIN 15019 Requirements								

Information: Load ratings above the heavy Line are Structurally limited capacities. Load ratings below the heavy line are stability limited capacities and do not exceed 75% of tipping.

Dimensions

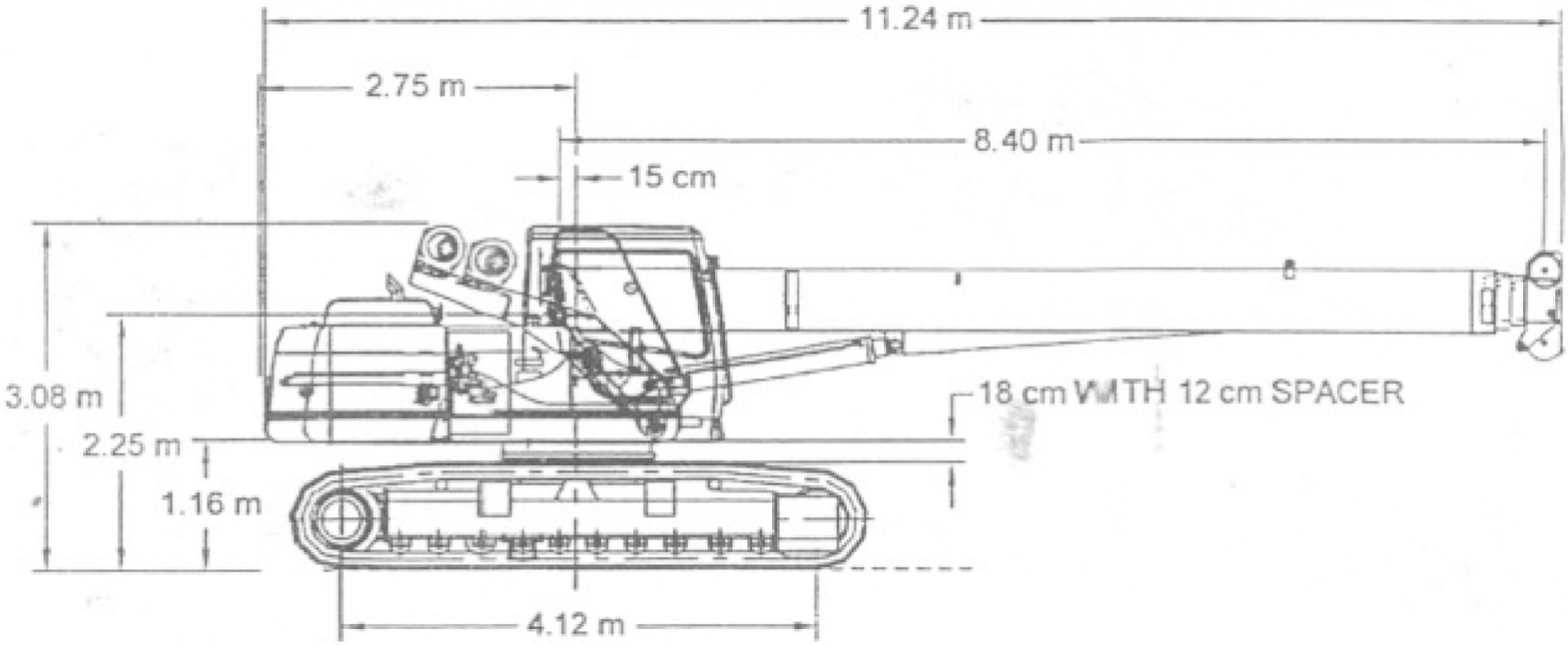
11.24 m
2.75 m
8.40 m
15 cm
3.08 m
2.25 m
1.16 m
18 cm WITH 12 cm SPACER
4.12 m

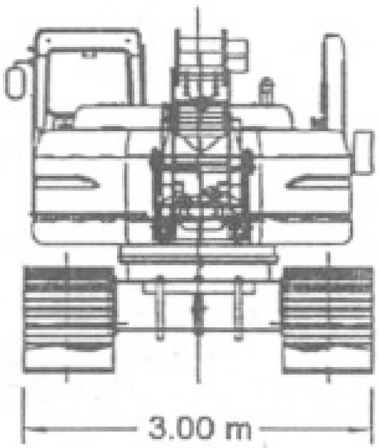
3.00 m

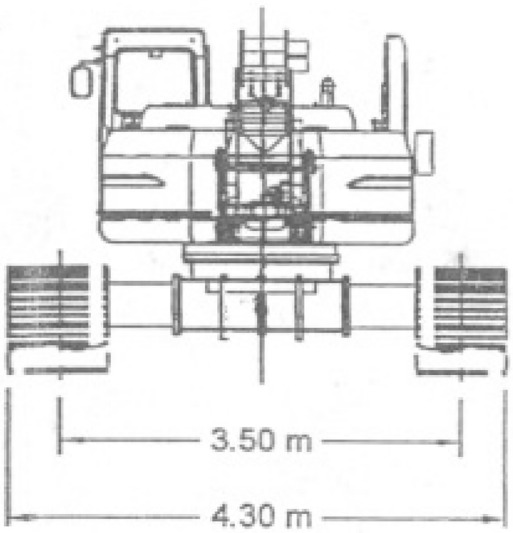
3.50 m
4.30 m

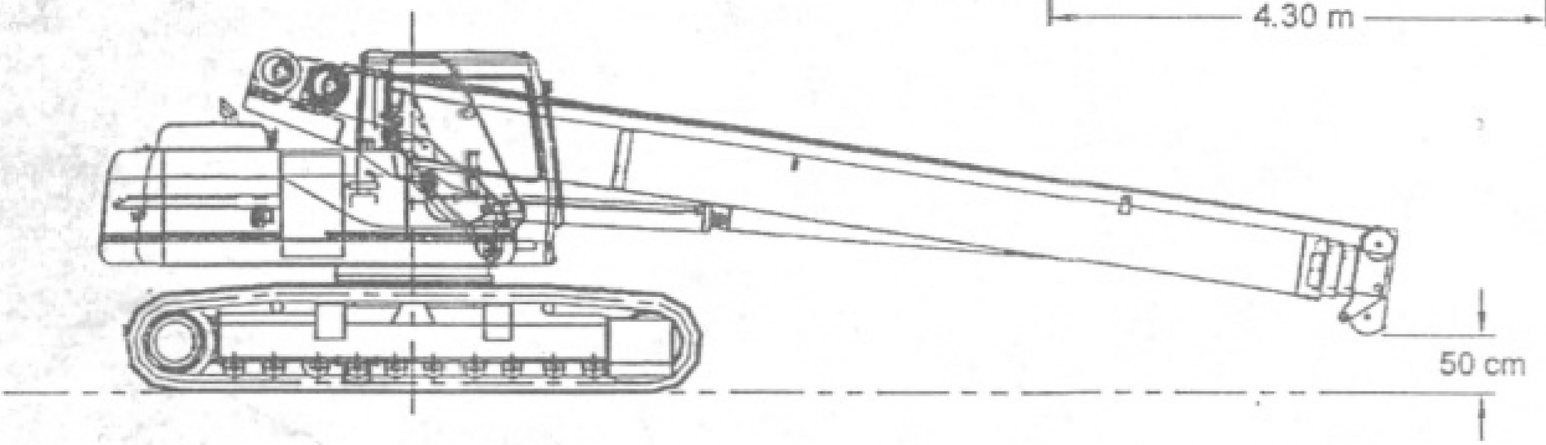
50 cm